EVKT-MP2651 Product Brief

MP2651 Evaluation Kit

I²C-Controlled, 1S to 4S Buck-Boost Charger with Reverse Source Mode

The MP2651 is a buck-boost charger IC designed for battery packs with 1 cell to 4 cells in series. The device can accept a wide 4V to 22V input voltage (V_{IN}) range to charge the battery. The buck-boost topology allows the battery voltage (V_{BATT}) to be above or below V_{IN}.

When the input is present, the MP2651 operates in charge mode. It measures V_{BATT} and charges the battery with four phases: constant current trickle charge, constant current pre-charge, constant current fast charge, and constant voltage charge. Other features include charge termination and auto-recharge.

The MP2651 also integrates the input current (I_{IN}) limit and V_{IN} limit to avoid overloading the input power source. This is compliant with USB and PD specifications.

The MP2651 can also supply a wide 3V to 21V voltage range at the input when source mode is enabled. The device also has an output current (I_{OUT}) limit in source mode.

To guarantee safe operation, the device limits the die temperature to a configurable threshold. Other safety features include input over-voltage protection (OVP), battery OVP, CFLR OVP, thermal shutdown, and a configurable timer to prevent prolonged charging of a dead battery.

Kit Contents

- EV2651 Evaluation Board (EV2651-VT-00A)
- Communication Interface with Accessories (EVKT-USBI2C-02):
  - USB-to-I²C Communication Interface
  - Ribbon Cable
- GUI installation File and Supplemental Documents Available Online

Optimized Performance with MPS MPL-AL5030 Inductor Series

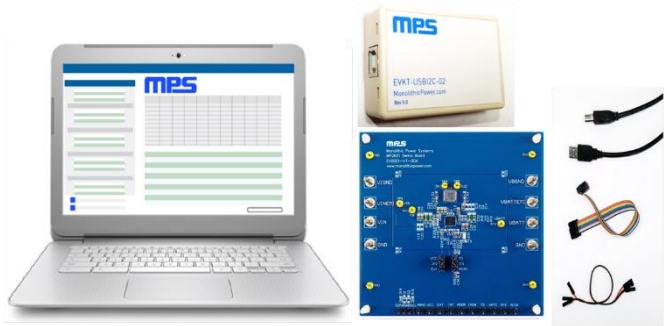

*Laptop not included

Feature	Specifications
Supply for Board	4V to 22V
Operating Input Voltage	4V to 22V
Battery Regulation Voltage	3.6V/Cell to 4.68V/Cell
Fast Charge Current	Up to 6000mA
Minimum Input Voltage Regulation	4V to 20.4V
Input Current Limit	Up to 6000mA
Output Voltage in Source Mode	3V to 21V
Operating Systems Supported	Windows XP, 7, or later
System Requirements	Minimum 22.2MB free
GUI Software	Programming Tool MP2651
EVB Size (LxW)	8.9cmx8.9cm

MPS Proprietary Information. Patent Protected. Unauthorized Photocopy and Duplication Prohibited.
© 2023 MPS. All Rights Reserved.

Quick Start (Refer to the user guide for more details.) [1] [2]

1. Install the GUI software.
2. Connect the communication interface to the evaluation board with the 3-pin ribbon cable and ensure that they are connected.
3. Connect the communication interface to the computer.
4. Preset the power supply output to between 4V and 22V, then connect the evaluation board.
5. Turn on the power supply of the evaluation board, then start the I^2C GUI software. It should check the connection automatically. If the connection is not successful, a warning should appear at the bottom. Otherwise, the USB and board statuses should be listed as “Connected”.
6. The control register information should be displayed in the register control bar.

Notes:

1) It is important to adhere to the order of steps 1 and 2. Failing to do so may damage the communication pins (SCL, SDA) during a hot-plug event.
2) Kit offers rapid application assessment and requires minimal external components.

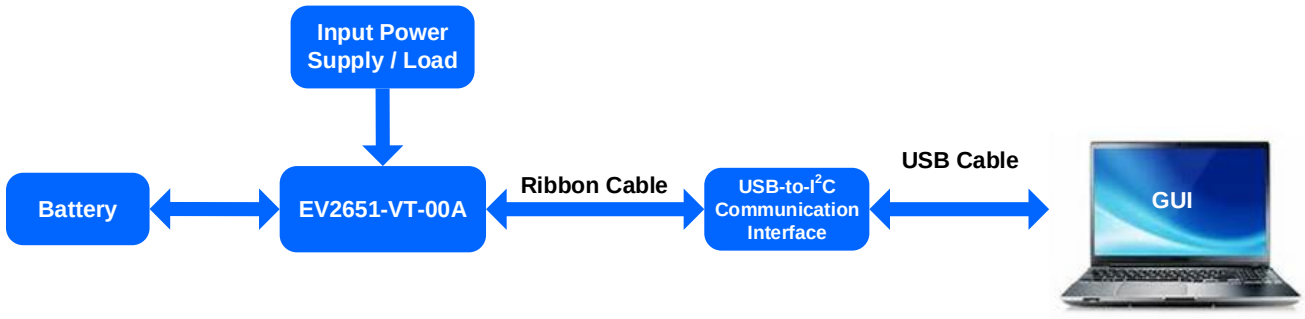

Figure 1: EVKT-MP2651 Evaluation Kit Set-Up

MPS Proprietary Information. Patent Protected. Unauthorized Photocopy and Duplication Prohibited.
© 2023 MPS. All Rights Reserved.

REVISION HISTORY

Revision #	Revision Date	Description	Pages Updated
1.0	2/8/2023	Initial Release	-

Notice: The information in this document is subject to change without notice. Please contact MPS for current specifications. Users should warrant and guarantee that third-party Intellectual Property rights are not infringed upon when integrating MPS products into any application. MPS will not assume any legal responsibility for any said applications.

MPS Proprietary Information. Patent Protected. Unauthorized Photocopy and Duplication Prohibited.
© 2023 MPS. All Rights Reserved.